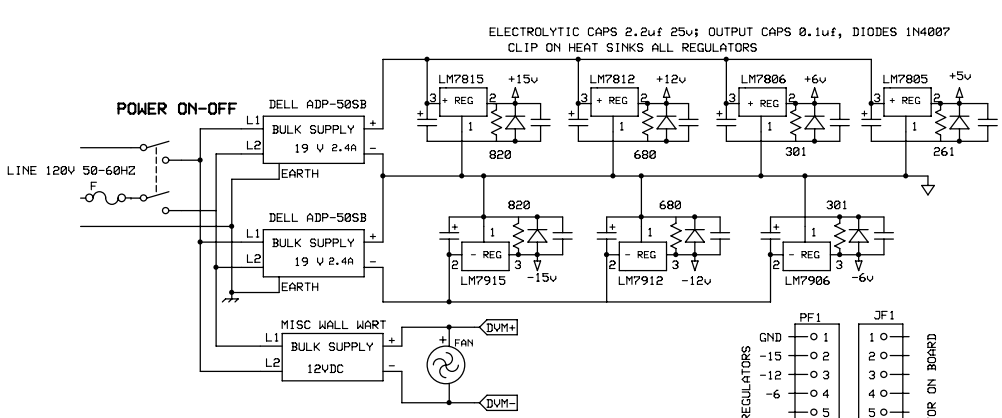

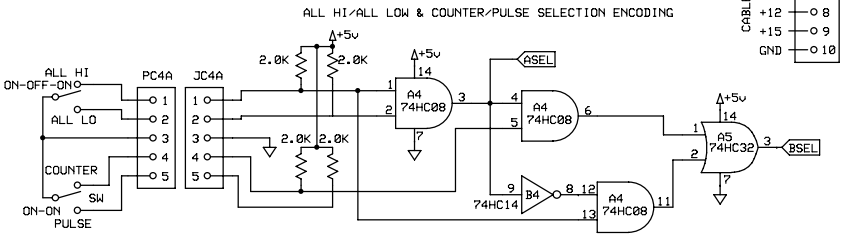

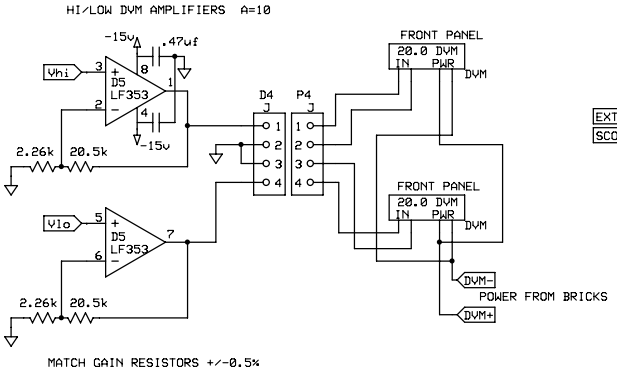

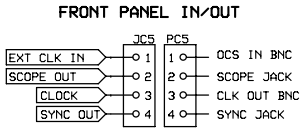

WIRING NOTE: To facilitate replacement of blocks, switch, or SMS connector, each signal is wired to a 3 level wire wrap post, block =L1, SMS=L2, Switch=L3

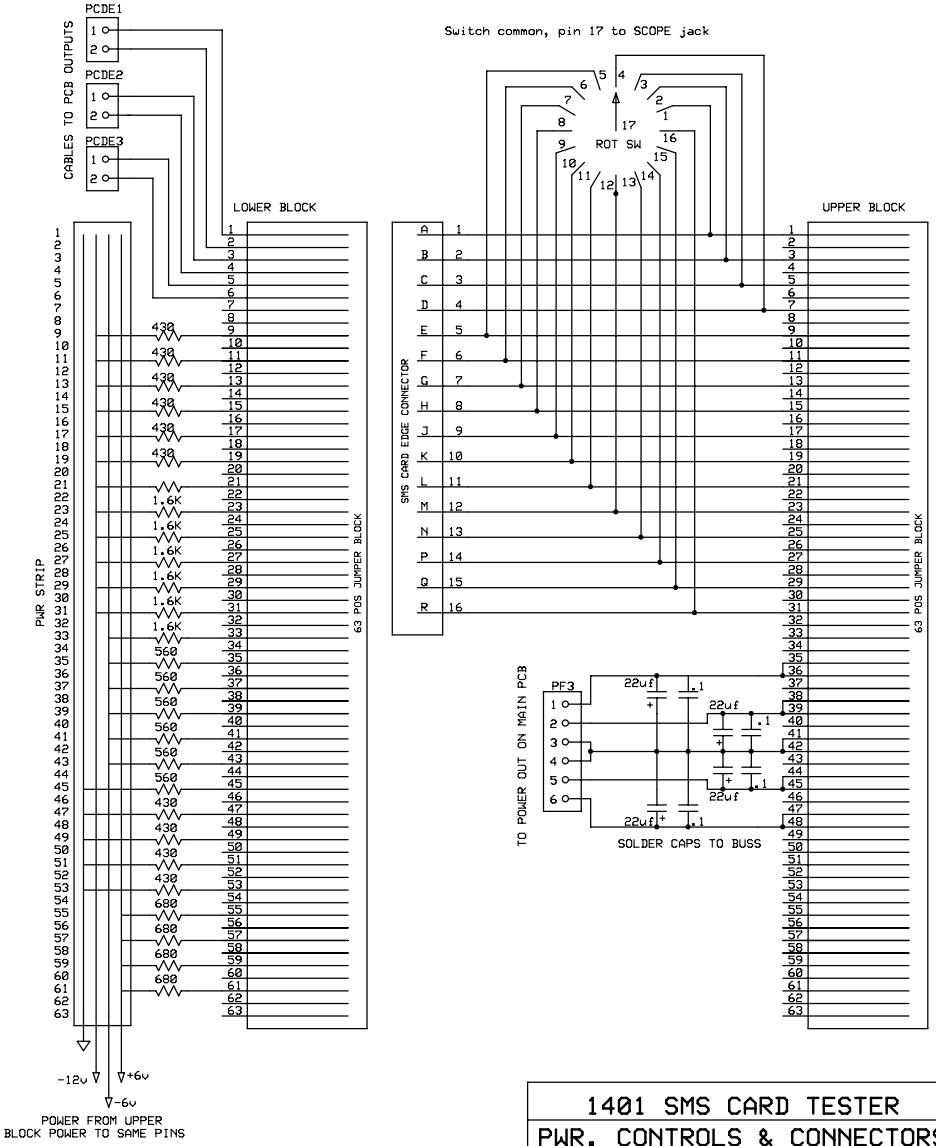

1401 SMS CARD TESTER

PWR, CONTROLS & CONNECTORS

Grant Saviers	Rev 19 3/4/2009	Page 2 of 2